ART. LAB1BH1**G**

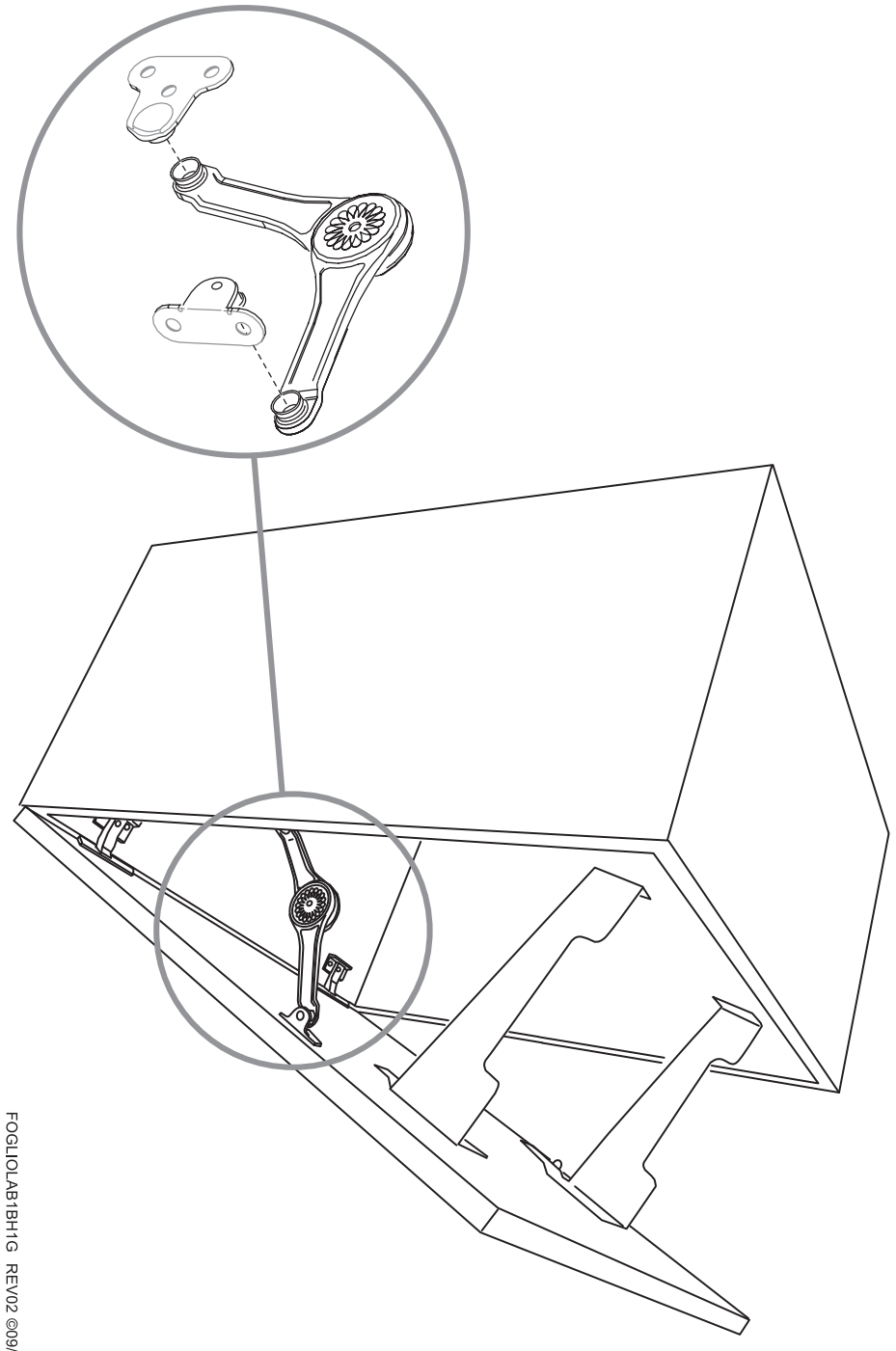

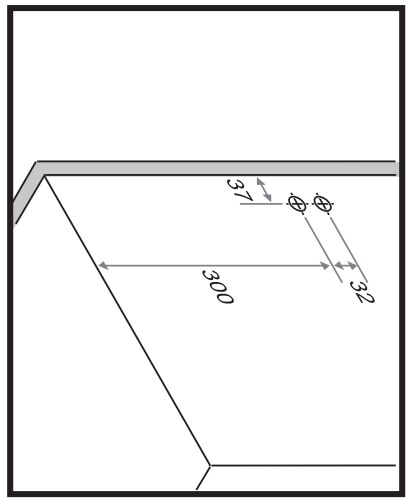

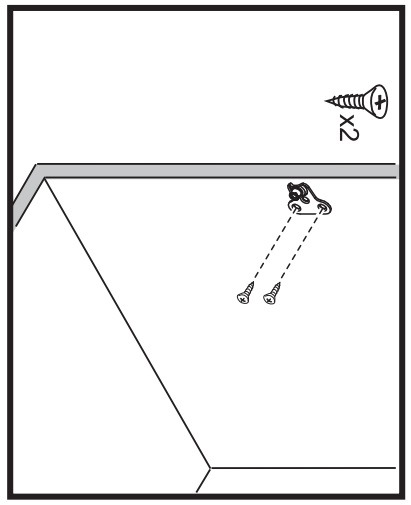

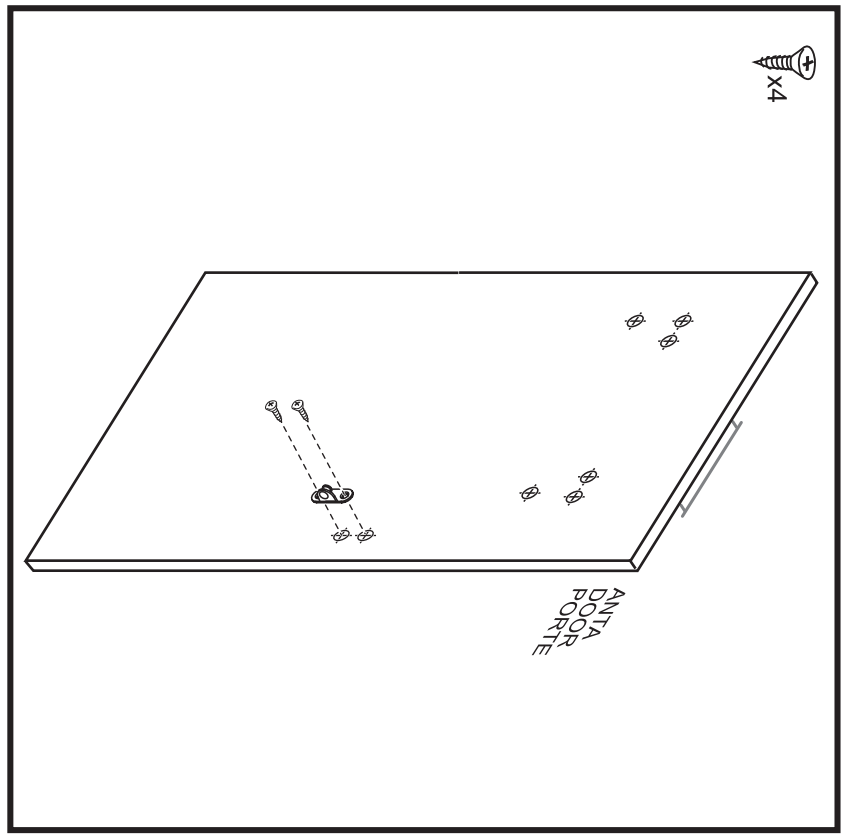

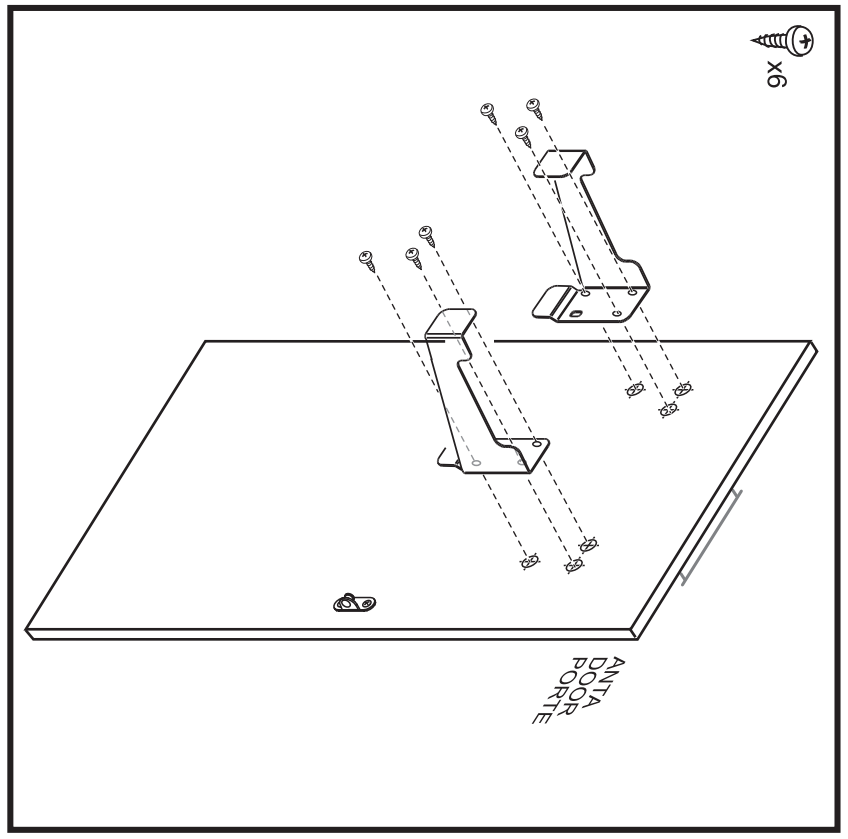

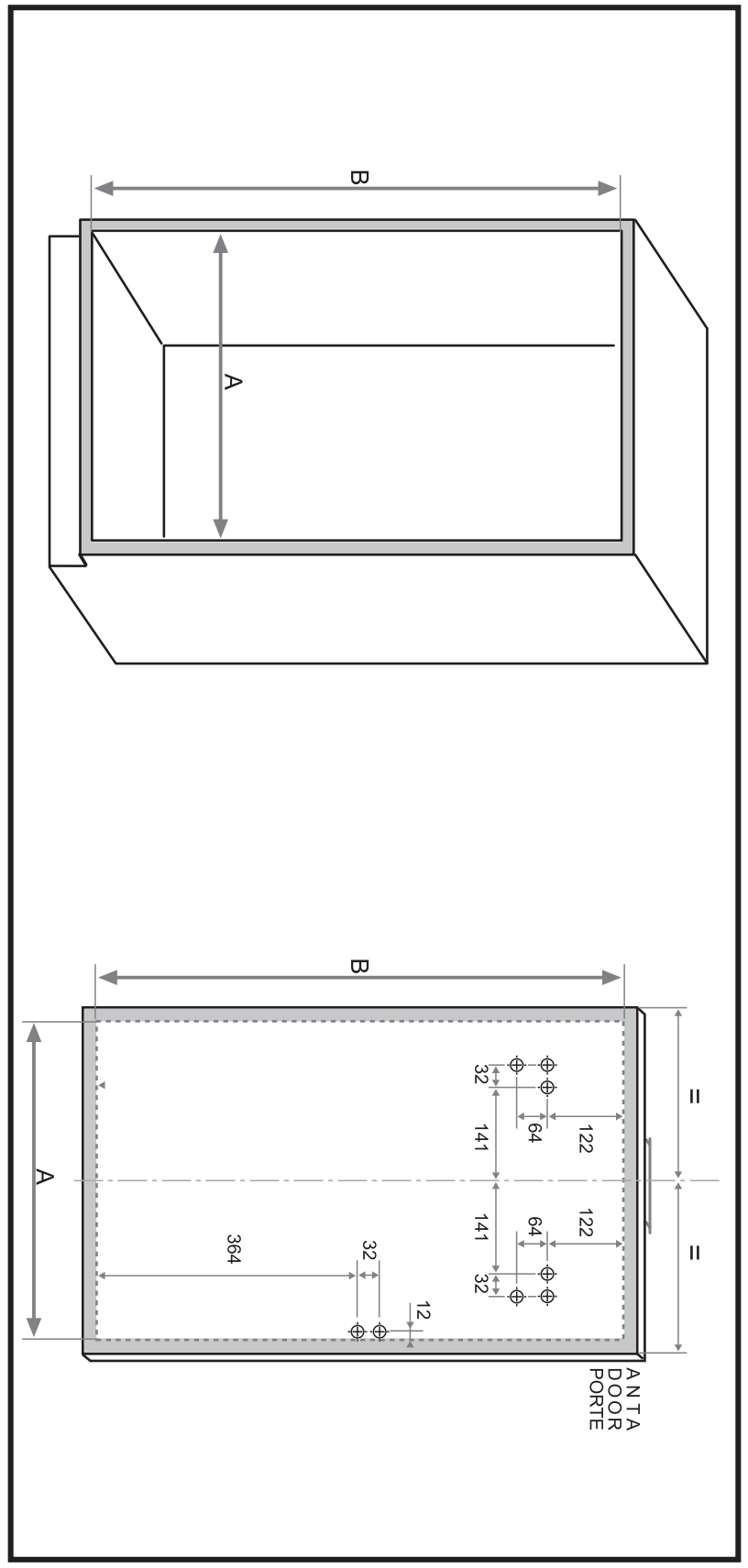

FOGLIOLAB1BH1G REV02 ©09/2023

https://quefairedemesdechets.fr